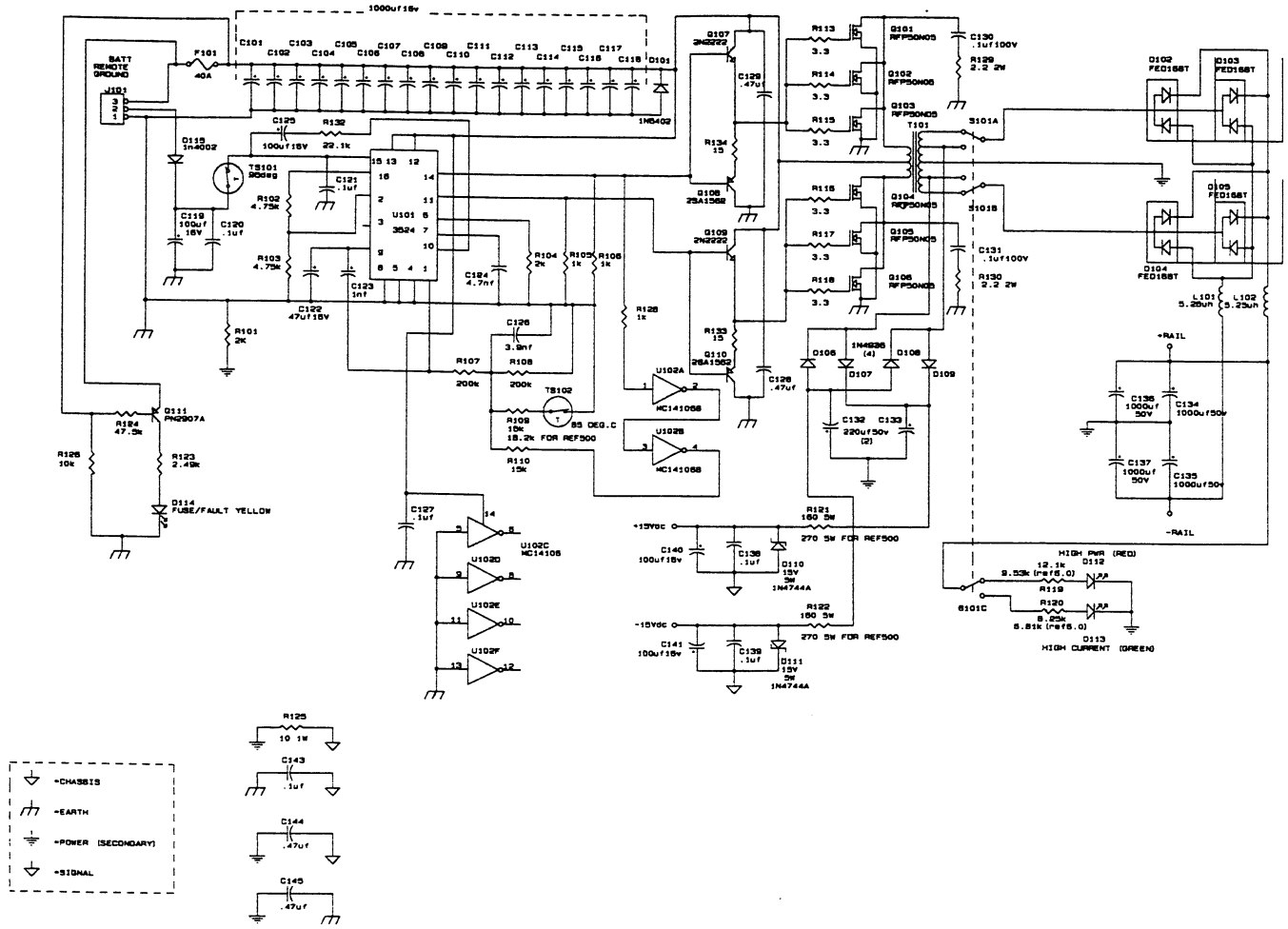

REFERENCE 500 & 6.0 POWER SUPPLY
7/94

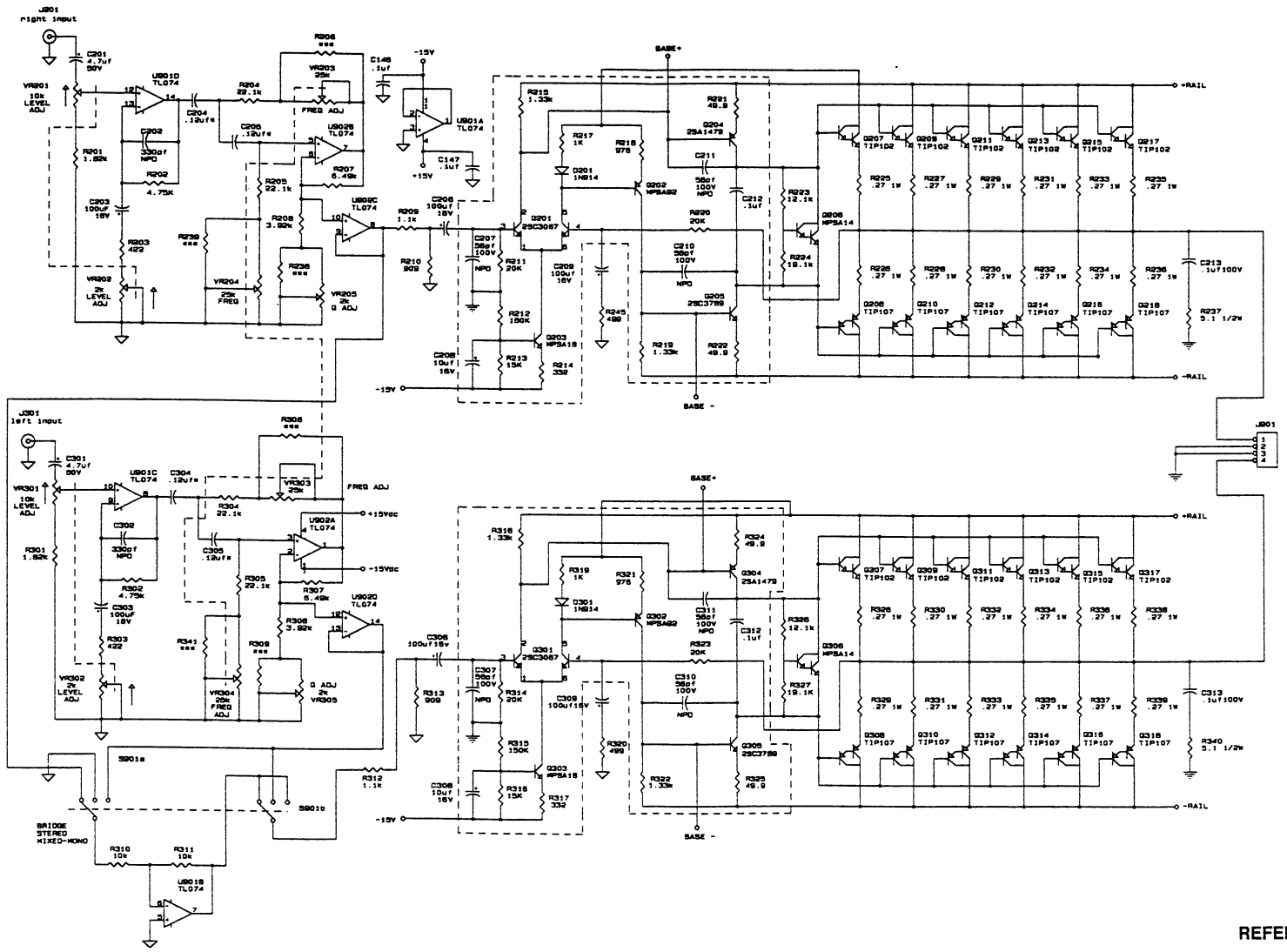

REFERENCE 500 AMP
7/94